NOTE:
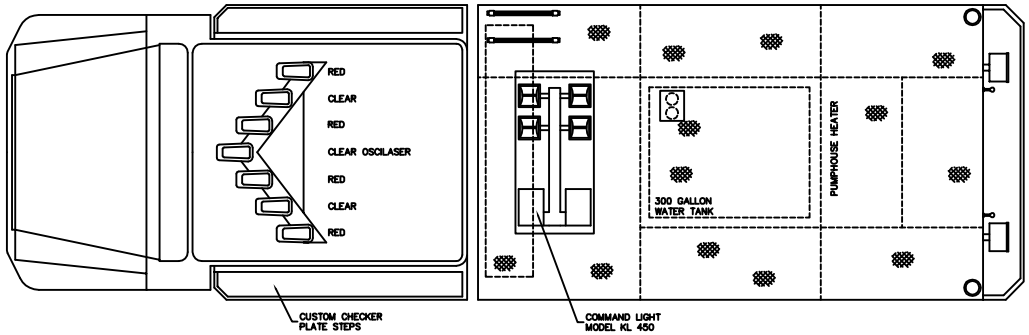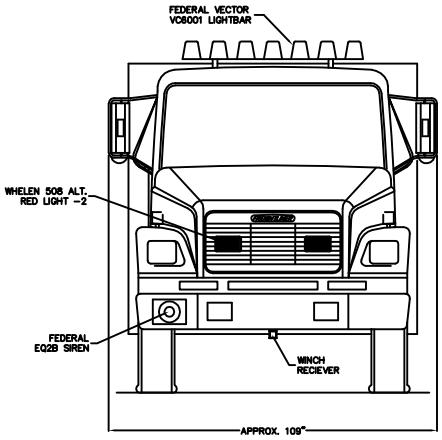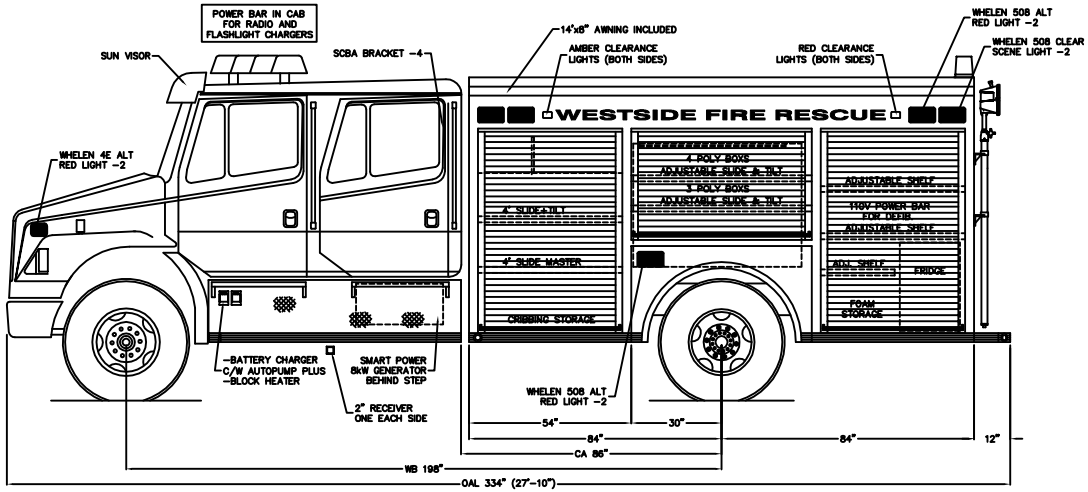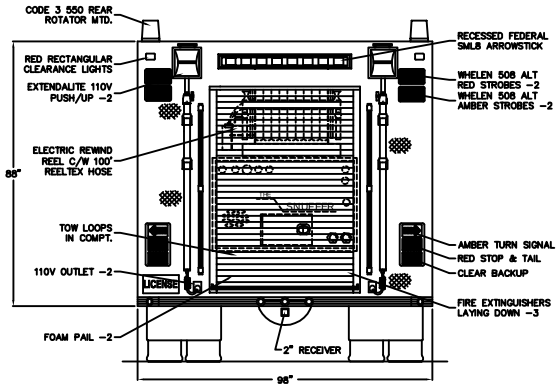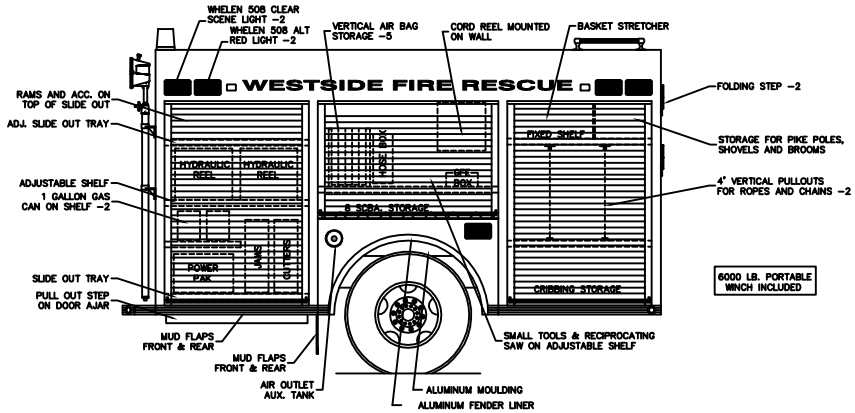
PLEASE REFER TO TENDER RESPONSE FOR ANY OMISSIONS OR ADDITIONS IN THIS DRAWING.