NOTE:

PLEASE REFER TO TENDER RESPONSE FOR ANY OMISSIONS OR ADDITIONS IN THIS DRAWING.

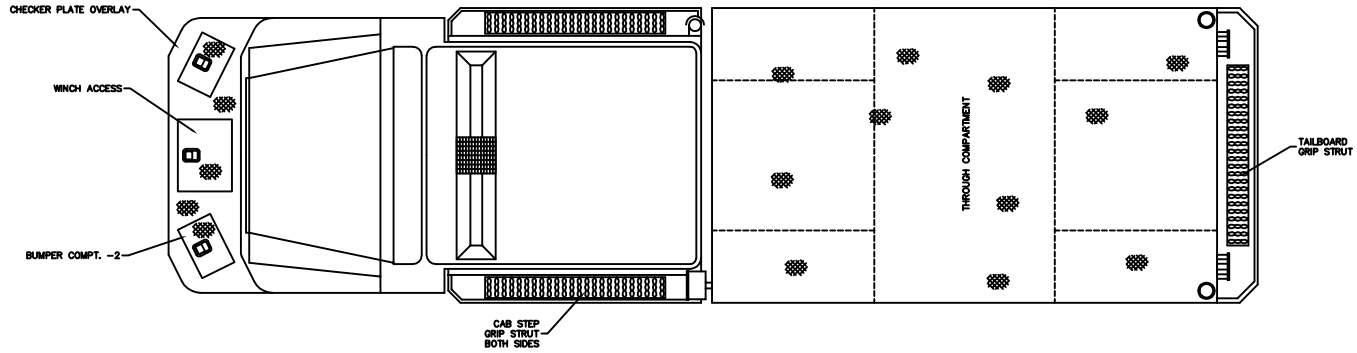

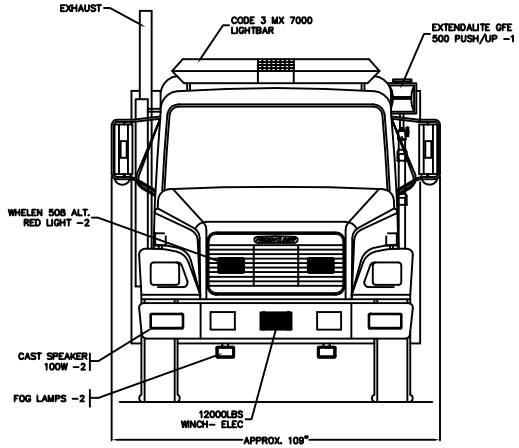

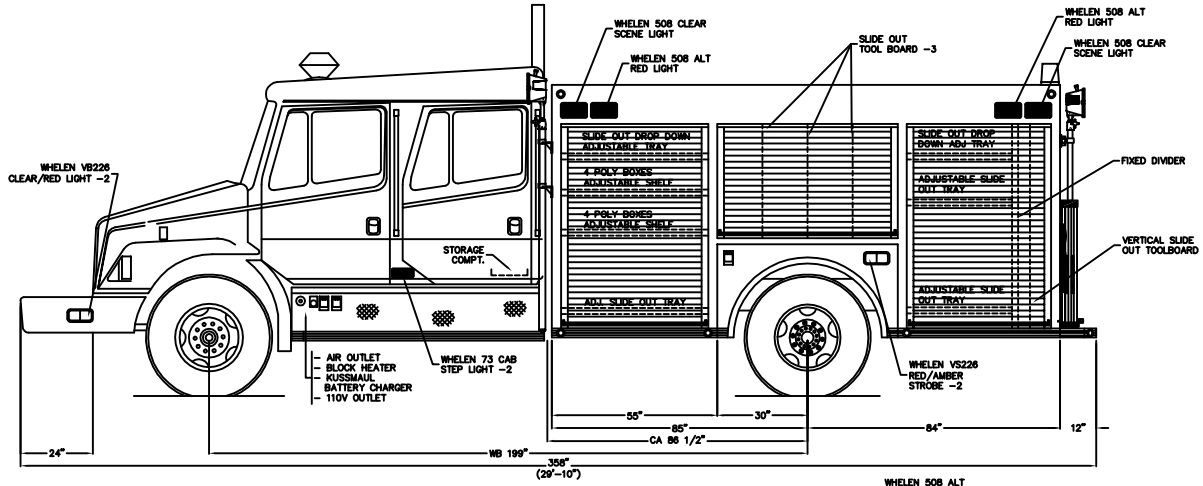

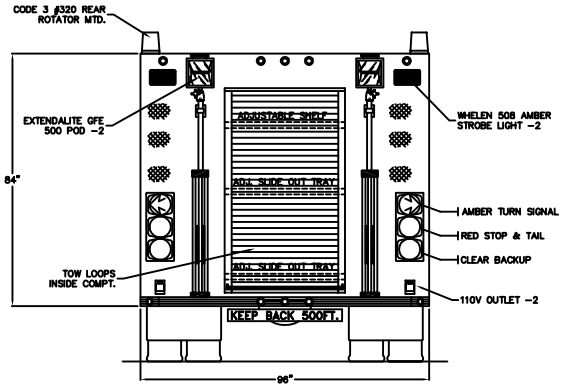

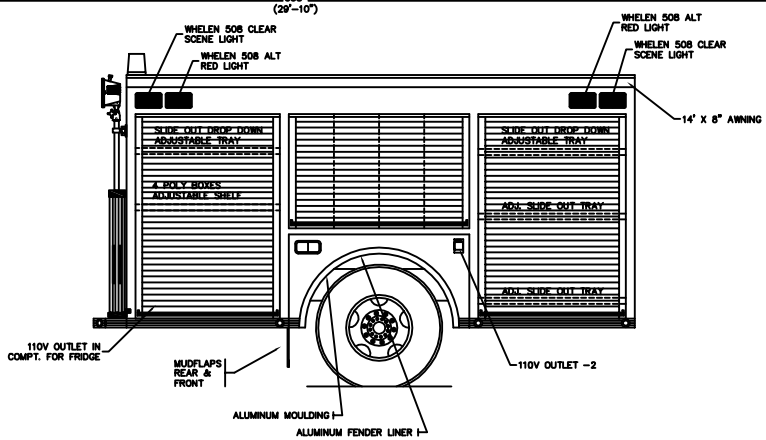

GRAPHICS NOTE:
PITT MEADOWS F.D.
ON REAR DOOR